第21回つくば市連盟杯軟式野球大会

2017/7/11

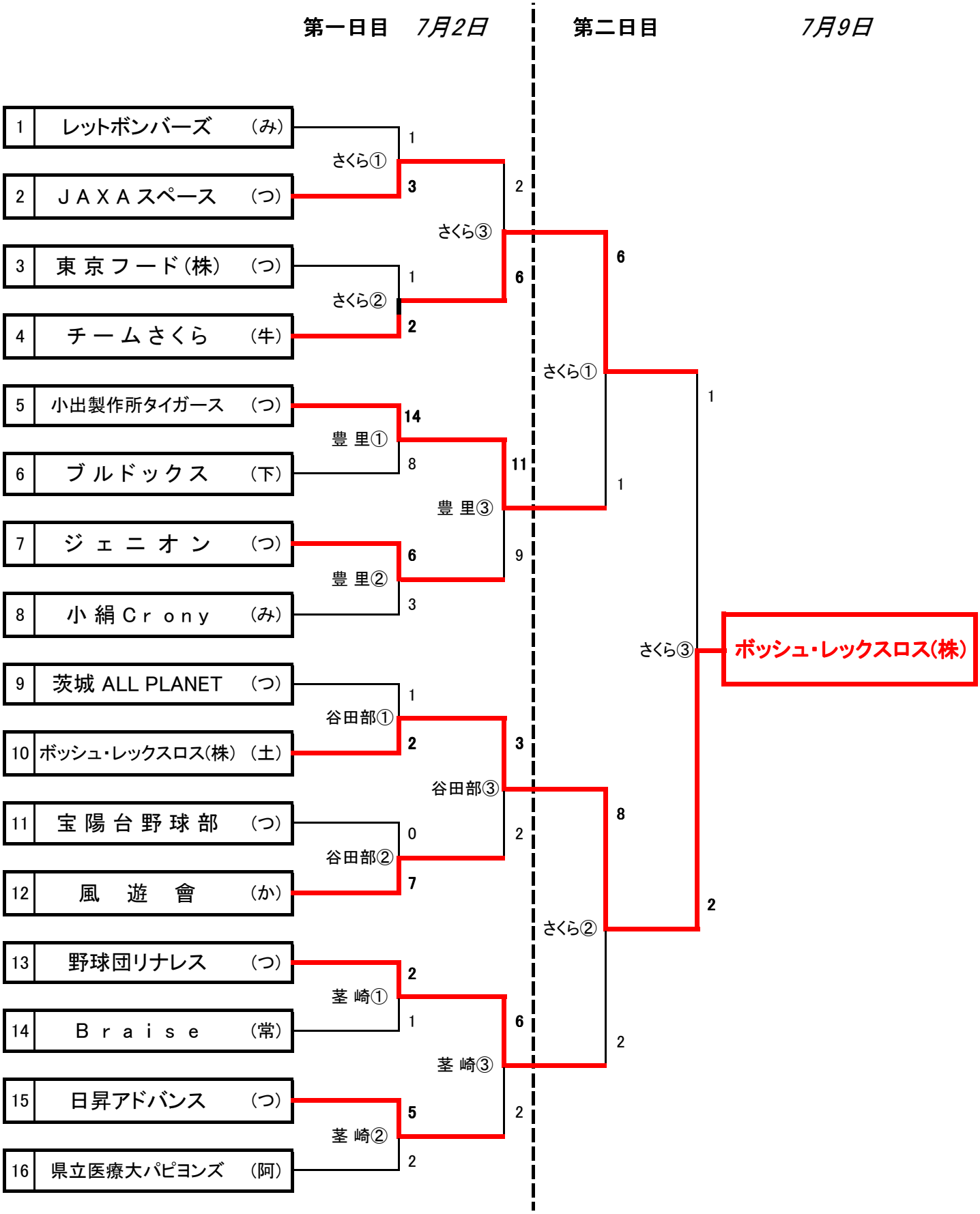

Copyright (C) 2017 Tsukuba Rubeer BaseBall federation. All Rights Reserved.